| DRAWING No. | |
|---|---|
| 246168–C | THE DRAWING AND DESIGN ARE THE PROPERTY OF WESTWIND AIR BEARINGS LTD. THEY REMAIN AT ALL TIMES THEIR PROPERTY AND MUST NOT BE USED TO THE DETRIMENT OF THEIR INTERESTS. |

**DO NOT SCALE DRAWING** — PROJECTION — IF IN DOUBT ASK

| PREVIOUS MODIFICATIONS | | | MOD No. | DATE | MODIFICATION | ISSUE |
|---|---|---|---|---|---|---|
| ISS. | MOD. No. | DATE | 52462 | 3.6.08 | | C |
| B | 43349 | 12.11.04 | MOVED THERMISTOR FROM SPEED CONNECTOR TO MOTOR CONNECTOR | | | |

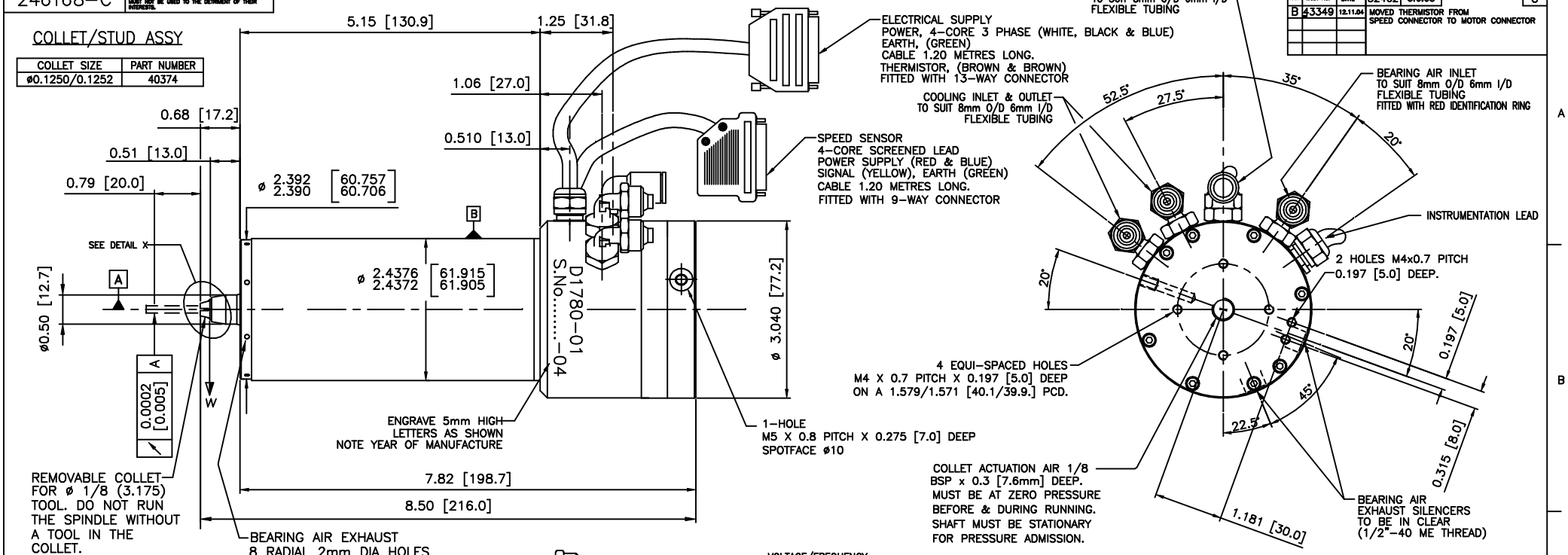


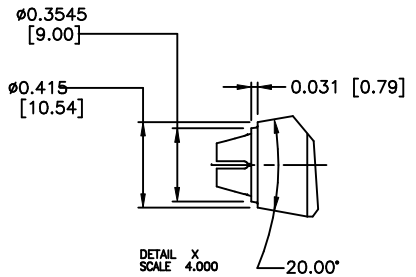


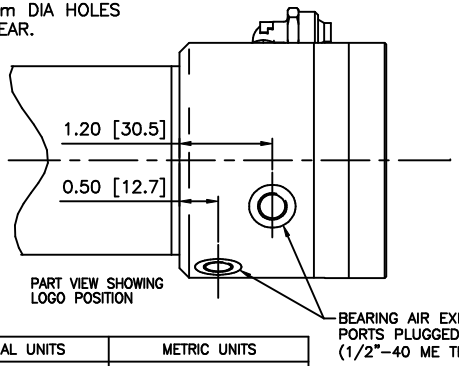


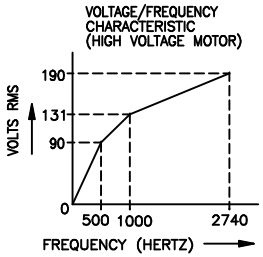


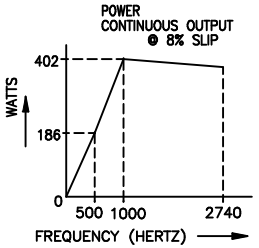


SPEED SENSOR CONNECTOR

END VIEW OF CONNECTOR SHOWN FROM REAR (SOLDER) SIDE

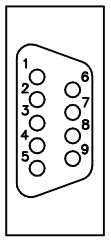


| PIN No. | WIRE COL. | FUNCTION |
|---|---|---|
| 1 | RED | +5V |
| 2 | – | NOT USED |
| 3 | YELLOW | SIGNAL |
| 4 | – | NOT USED |
| 5 | BLUE | 0V |
| 6 | – | NOT USED |
| 7 | – | NOT USED |
| 8 | – | NOT USED |
| 9 | – | NOT USED |

ELECTRICAL SUPPLY CONNECTOR

END VIEW OF CONNECTOR SHOWN FROM REAR (SOLDER) SIDE

| PIN No. | WIRE COL. | FUNCTION |
|---|---|---|
| A1 | WHITE | PHASE 1 |
| A2 | BLACK | PHASE 2 |
| A3 | BLUE | PHASE 3 |
| 1 | BROWN | THERMISTOR |
| 2 | BROWN | THERMISTOR |
| 3 | – | NOT USED |
| 4 | – | NOT USED |
| 5 | – | NOT USED |
| 6 | – | NOT USED |
| 7 | – | NOT USED |
| 8 | BRUSH CONTACT | |
| 9 | GREEN | EARTH |
| 10 | – | NOT USED |

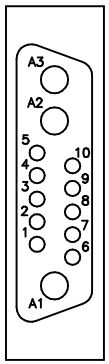


| BASIC SPECIFICATION | IMPERIAL UNITS | | METRIC UNITS | |
|---|---|---|---|---|
| BEARING AIR SUPPLY PRESSURE | 80 | P.S.I.G. | 5.6 | Kg/cm ² |
| AIR CONSUMPTION (AT 80 P.S.I.G.) | 4.4 | S.C.F.M. | 122 | Litres/min |
| COOLING WATER FLOW | 21.3 | IMP. GALL/Hr | 1.6 | Litres/min |
| COOLING WATER INLET TEMPURATURE | 16–20 °C | | | |
| MAX. HEAT DISSIPATION TO COOLING WATER | 1906 | BTU/HOUR | 560 | WATTS |
| RADIAL FAILURE LOAD AT W (AT 160,000 RPM) | 16 | lbf | 7.2 | Kgf |
| AXIAL FAILURE LOAD (PUSH) | 40 | lbf | 18.1 | Kgf |
| MAXIMUM SPEED | 160,000 RPM | | | |
| COLLET ACTUATION PRESSURE | 78–82 | P.S.I.G. | 5.5–5.8 | Kg/cm ² |
| APPROX. WEIGHT | 7.15 | lb | 3.24 | Kg |
| MAXIMUM AXIAL ACCELERATION | 60g [DERIVED THEORETICAL MAXIMUM] | | | |
| ADDITIONAL APPLICATIONS INFORMATION IS AVAILABLE ON REQUEST | | | | |

| GEOMETRIC TOLERANCE SYMBOLS | | | |
|---|---|---|---|
| CHARACTERISTIC | SYM | CHARACTERISTIC | SYM |
| STRAIGHTNESS | — | CYLINDRICITY | ⌭ |
| ROUNDNESS | ○ | SQUARENESS | ⊥ |
| PARALLELISM | // | CONCENTRICITY | ◎ |
| ANGULARITY | ∠ | SYMMETRY | ⌯ |
| RUN OUT | ↗ | FLATNESS | ⏥ |
| TOTAL RUN OUT | ⌰ | POSITION | ⌖ |

LIMITS: NOMINAL UNLESS OTHERWISE STATED

| | SIGNED | DATE |
|---|---|---|
| DRAWN | G.R. | 02.04.04 |
| CHECKED | N.S. | 02.04.04 |
| DEVELOPMENT APPROVAL | JDS | 02.04.04 |

DIMENSIONS IN INCHES REMOVE SHARP EDGES

TITLE: *PROVISIONAL OUTLINE*

PRODUCT: D1780–01

DRAWING No.: 246168–C

GSI — WESTWIND®